Ground Floor

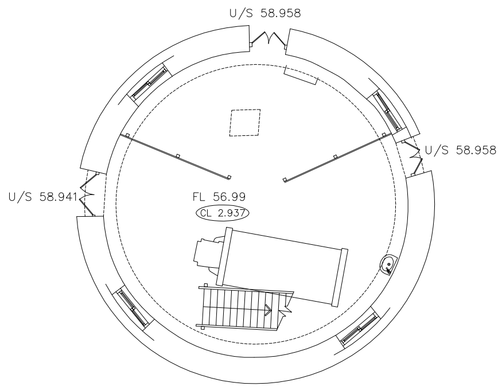

First Floor

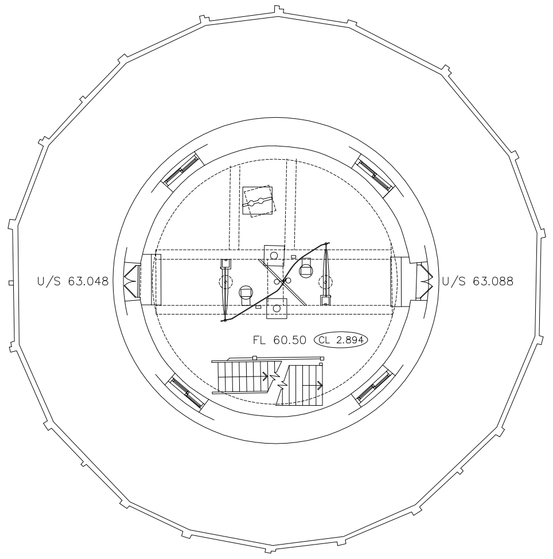

Second Floor

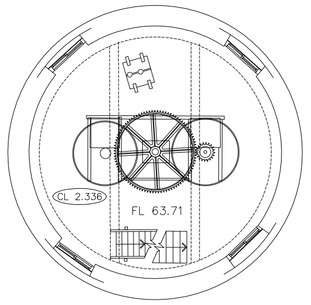

Third Floor

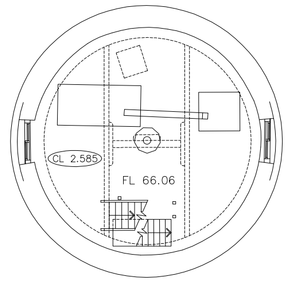

Fourth Floor

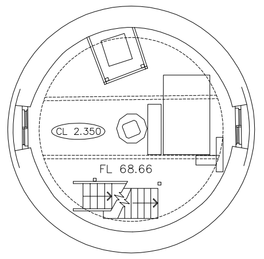

Cap

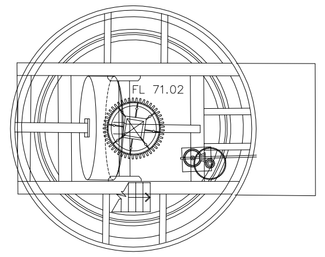

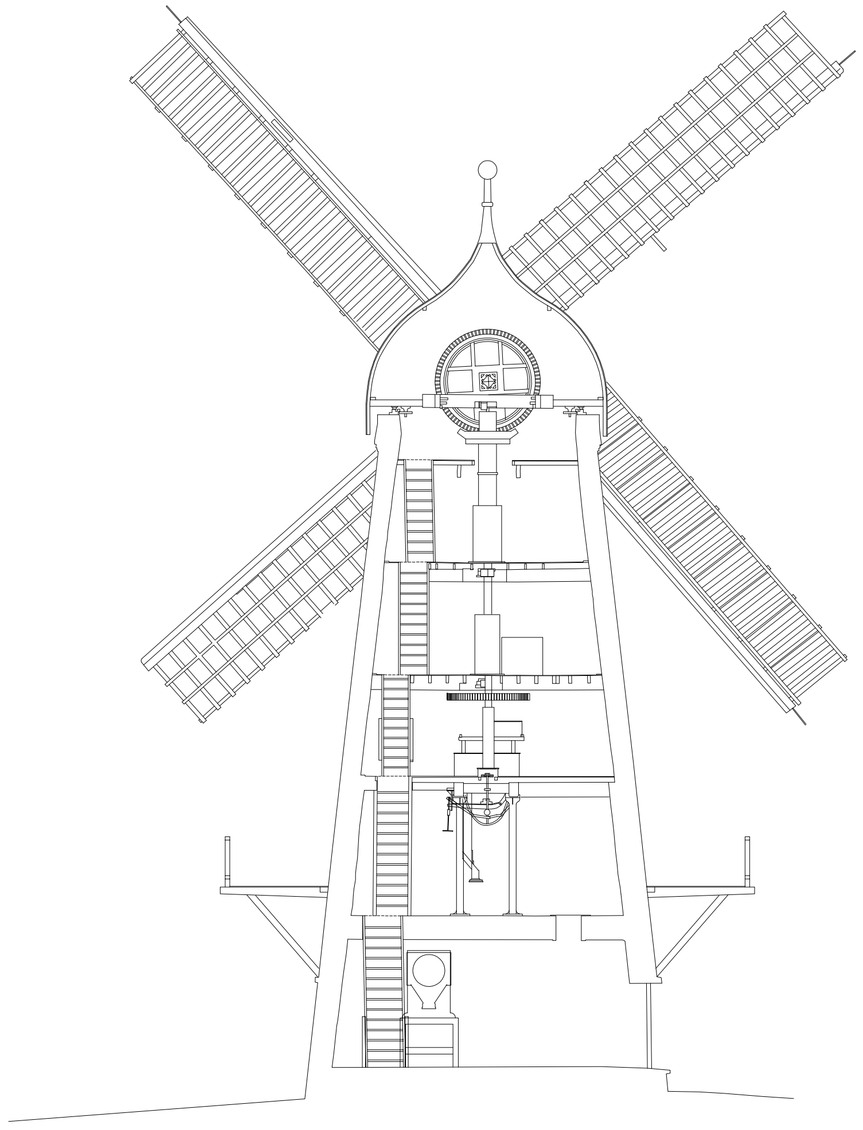

Section A - A

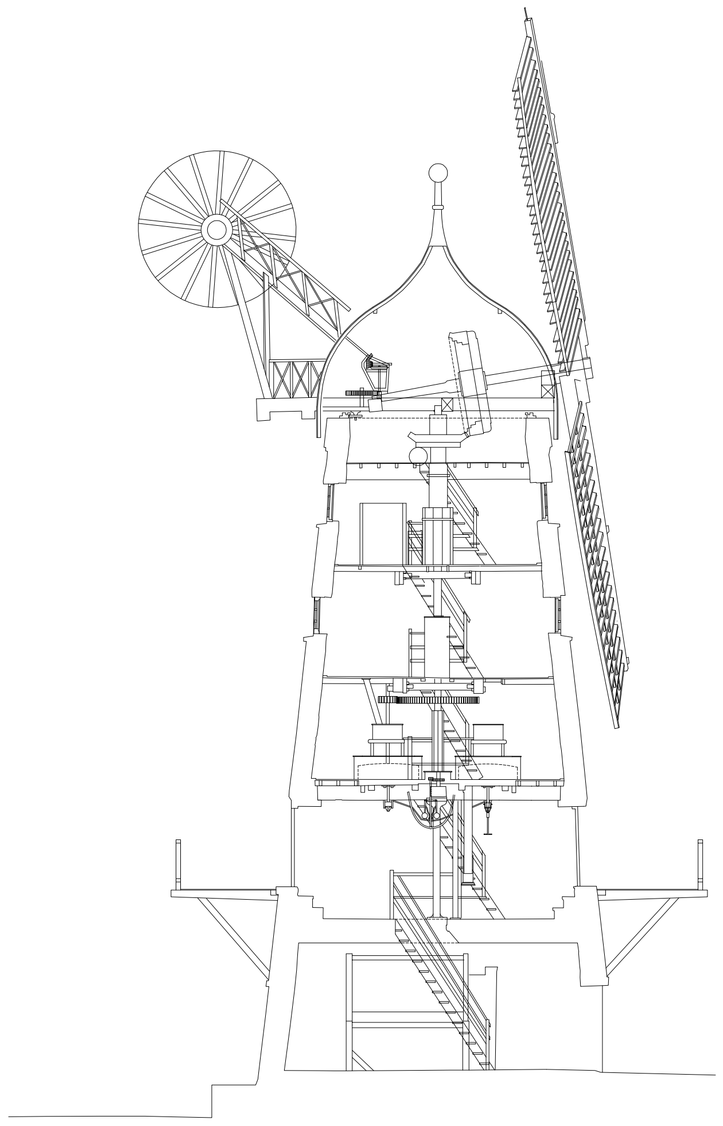

Section B - B

Datum Line 50.00m

mksurveys
www.mksurveys.co.uk
Tel 01908 565561 Milton Keynes enquiries@mksurveys.co.uk
Tel 07525 234409 Oxford oxford@mksurveys.co.uk
Tel 01562 540500 Kidderminster midlands@mksurveys.co.uk

Windmill

Sample Floorplans / Sections